UHD 185 FAQs

Version 1.0

Software

System Setup

How is a typical setup of the UHD 185?

The typical Setup of the UHD 185 consists of one UHD 185, one controlling unit and optional one battery pack.

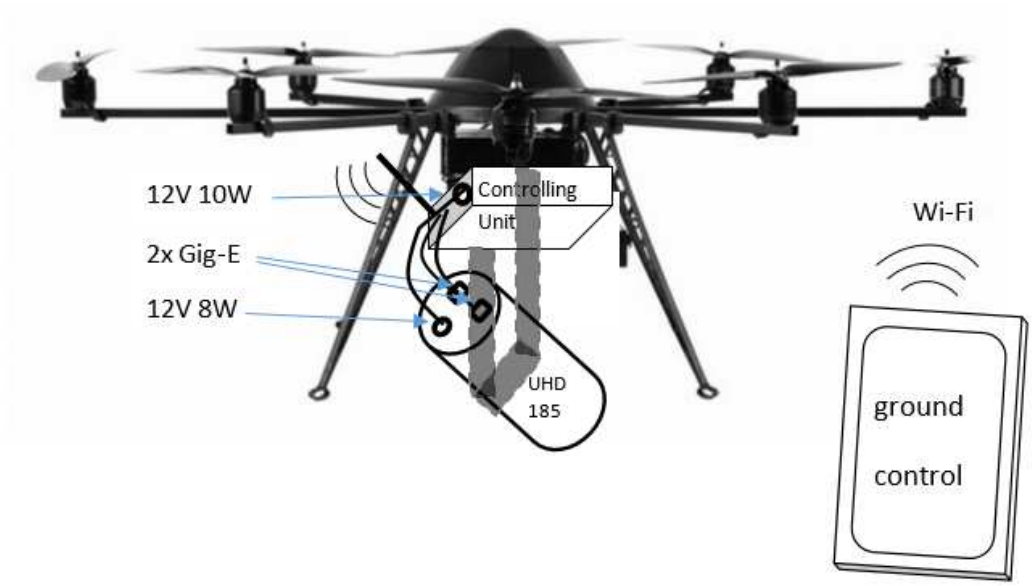

The system may be attached to a rotating camera holder or directly to the microcopter. In case of direct connection a front mirror is used to tilt the view angle of the camera by 90°. This is especially handy, if you want to attach the system to a plane where it is most likely directed to the front.

Is a wireless control during flight possible?

Yes, wireless connection is easily possible. Our software is designed for the native control of the camera over TCP/IP. That means, you can control the system over a Wi-Fi connection in the same way you would do if it would be attached to your stationary computer. You can watch preview images during flight, start measurements and even have a look at the data.

How do I trigger the image acquisition?

You are able to use our control software together with the wireless link to trigger image acquisition. Furthermore you can use the trigger input of the camera.

What is the power consumption?

The system needs 12 V stabilized. The power consumption of the UHD185 together with the controlling unit with established Wi-Fi connection is 1,34 A @ 12V during measurement. During startup we have peaks of 1.47 A @12 V =17.46 W. We recommend a power source capable of delivering 2 A @ 12 V.

What are the Specs of the controlling unit?

- Intel Atom processor dual core
- Windows 7
- 4x USB
- Display port
- Network: 2x Gig Ethernet (used by UHD 185) + Wi-Fi
- Hard drive: 64-128 GB SSD
- Storage: SD-Card reader
- Total weight: 316,8g
- Power consumption: 7-10 W @ 12V
- Size: 115x27x101 mm
- Operating Temperature: 0-70°C

Can you provide a battery pack for mobile use?

Yes, for standard mobile use we can provide commercially available sources, e.g.: battery pack XP 10000 (10000 mAh, 12 V, 2 A max). Runtime is above 2 hours with our system.
For UAV use a LiPo pack with external charging unit is advised and can be delivered on request, depended on runtime and weight requirements of your application.

What is the weight of the ready to flight system?

UHD 185:	470.4 g
Mini Pc, 128 SSD, Wi-Fi:	316.8 g
GigE Cable:	2x 13.8 g
Power Cable (0.7 m):	26.2 g
Total:	841.0 g

Additionally attachment material may be needed, depending on your UAV.

I want to fit the system into my own UAV. How big is the whole setup?

You have to fit in the control unit which has the size of: 115x27x101 mm + one detachable Wi-Fi antenna of 86 mm length. All cables are attached to the side of the Wi-Fi antenna. The plugs of the connection cable will need 25 mm on the shorter side.

The size of the UHD 185 as given in technical documentation is:

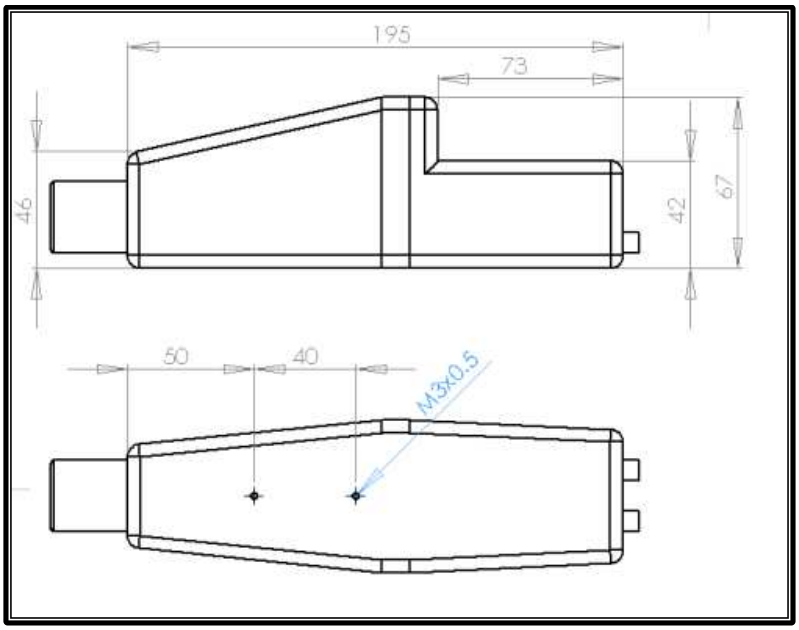

The length of the connection cables between UHD 185 and control unit can be adjusted.

Optical System

What is the focal length of the camera?

Depending on your need we are able to provide nearly every focal length needed.

At the moment we offer lenses with the focal length of 12 mm, 15 mm, 25 mm and 50 mm. Which have the following technical characteristics:

Objective (focal length)	10 mm		17 mm		23 mm		50 mm	
Objective (aperture)	33°		20°		15°		7°	
Distance (m)	BD [m]*	SP [cm]**	BD [m]	SP [cm]	BD [m]	SP [cm]	BD [m]	SP [cm]
0,5	0,33	0,47	0,18	0,26	0,13	0,19	0,06	0,09
1	0,66	0,93	0,36	0,52	0,27	0,38	0,12	0,17
2	1,32	1,86	0,73	1,03	0,53	0,75	0,24	0,34
3	1,98	2,8	1,09	1,55	0,8	1,13	0,36	0,51
10	6,59	9,32	3,64	5,15	2,65	3,75	1,2	1,7
20	13,19	18,65	7,29	10,3	5,31	7,51	2,41	3,41
50	32,97	46,62	18,21	25,76	13,27	18,77	6,02	8,52
100	65,93	93,24	36,43	51,52	26,54	37,53	12,04	17,03
300	197,8	279,73	109,29	154,55	79,62	112,59	36,13	51,1
500	329,67	466,22	182,14	257,59	132,69	187,66	60,22	85,16

BD [m]*	Image diameter
SP [cm]**	Diameter of a spectral pixel

Is the Lens interchangeable?

Yes, the lens may be changed. But It needs an in-house calibration at the Cubert GmbH.

Can I use my own lenses?

You can use nearly every lens with C-mount adapter. They have to be mechanically adapted and the lens must not stick out of the mount on the back.

Do you provide zoom optics?

Not yet available. It may be implemented.

What about image distortions?

Like every digital camera we do have image distortion which depends on the chosen objective. The vignetting of the objectives is automatically corrected through our radiometric calibration or by reference measurement. For usual focal length the image distortion of industry grade C-mount objectives is very low (and may be corrected with 3d party software after capturing).

How is the camera calibrated?

Standard procedure is the measurement of a white standard (e.g.: Zenith lite targets www.sphereoptics.de) before liftoff. The camera will now automatically calculate the reflectance of the image in respect to this white standard.

Is radiometric calibration of the camera possible?

Yes.

Full Frame Spectroscopy

Do I really get a cube in every frame of the CCD?

Yes, in as low as 0.1 ms integration time you will get one hyper spectral cube.

How does the full frame imaging work?

Our full frame imaging approach is technically quite similar to the push broom scanning imaging spectrometers. There you have a lens which maps an image to the entrance slit. This slit is then imaged through a dispersive element to the CCD.

Instead of the slit we use a 2D entrance array which is imaged through the dispersive element onto the CCD. There the 2D information is remapped to the 3D Cube. That means you will have one hyper spectral cube every Frame of the CCD and no scanning and no moving parts are needed.

How do I get the raw data?

In standard use you will get the data interpolated to a fixed step width of 4nm. There is no filtering or noise reduction involved.

You don't want the system to change integration time or amplifying automatically?

The System will only change the integration time or amplification when you want it to.

Do you need an IMU?

Actually you will need no IMU to generate hyper spectral images. You can also continuously record hyper spectral cubes and map them to each other to cover big areas. With ground marks you can have this areas geo referenced.

You already have an IMU and want to use it?

You can use your IMU together with our device. You can send GPS information.

What is the common integration time?

The common integration time to generate one hyper spectral cube is 1ms in sunlight. This is independent of the height of your UAV.

Is hyper spectral video capturing possible?

Yes, instead of only hyper spectral images you may capture hyper spectral video with the device.

The frame rate is restricted by the power of your control unit. The lightweight control unit which is used for UAVs has only very restricted video capabilities.

Is cooling of the Camera possible?

The UHD 285 is available in a cooled housing. In common outdoor situations, with integration times as low as 1 ms the cooling will not lower the noise level dramatically but it will add a lot of weight and power consumption.

Software FAQ

What Software solutions do you offer?

The system comes fully equipped with a control software, which works remotely over network connection. This software features remote system control, image and video acquisition, time laps functions, and simple data analysis. The Software is currently under heavy development as we add new features.

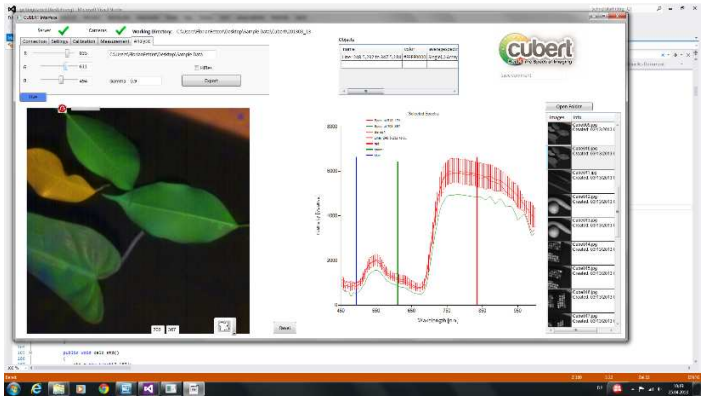

Cubert-Client Software with simple data analysis capabilities

What is the core architecture of the Software?

The Software is divided in 2 parts. On the control unit a server process is running. This server controls the camera and does the preprocessing of the data. The server is controlled by a GUI application which sends simple ASCII commands over internet protocol to the control unit.

For your convenience we implemented multiple client applications in different programming languages which are able to control the server.

Can I program the Software myself?

Programming the system is very easy. As interface we use simple socket communication which can be implemented to every programming language available. As a starting point we provide you the source code of our Matlab or our Python application if you don´t have a Matlab license.

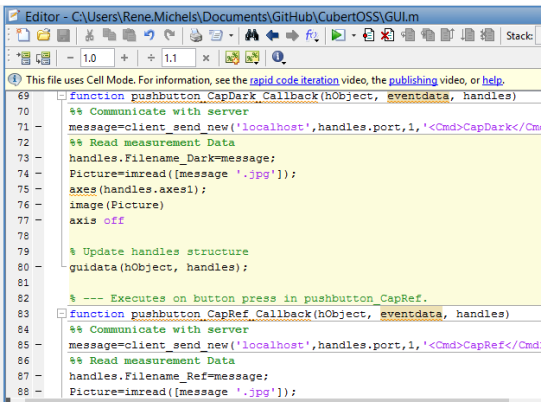

Source Code available

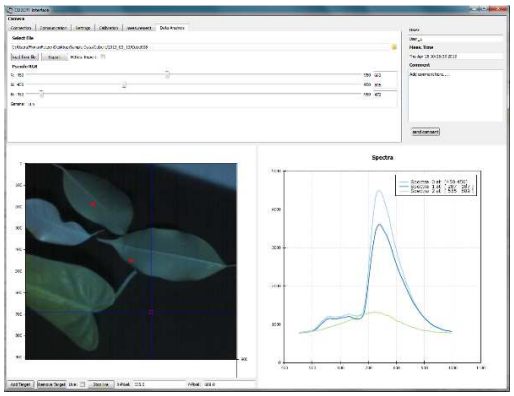

Cubert-Python Surface

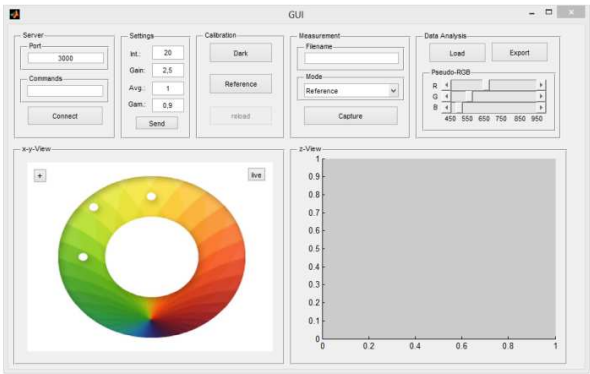

Cubert-Matlab Surface

Is it possible to install the software on a different Pc?

Yes, you are welcome to install the software on different machines without charge.

Can we install the Camera to different computers?

You can install the camera to nearly every Windows PC available which features 2 Gig-Ethernet Ports.

Where is the data stored?

Our Software will automatically save every image you capture to the hard drive of your computer or the SD Card. Usually it will create a new folder for every measurement day under Documents/Cubert/YEAR_MONTH_DAY. You can open the images after the measurement at any time. You can simply copy the data with the file browser to a different location and open it on a different machine.

What can I do with the data?

With our software you can always open old measurement files and work with them like you have just measured them. You can generate false color 3 channel views, you can select spectra from the image and compare them. You can calculate the standard deviation of areas and plot the average spectra. You can use simple analysis tools, like our correlation algorithm, to find similar spectra in a scene.

Or you can simply export the data to 3rd Party Software.

What export Formats do you provide?

We provide native export to Envi file format, either as 1 Megapixel x 138 channels or as low resolution. You can export directly the false color image, the selected spectra to txt file, or all spectra to CSV …

If you have special needs, don't hesitate to ask.